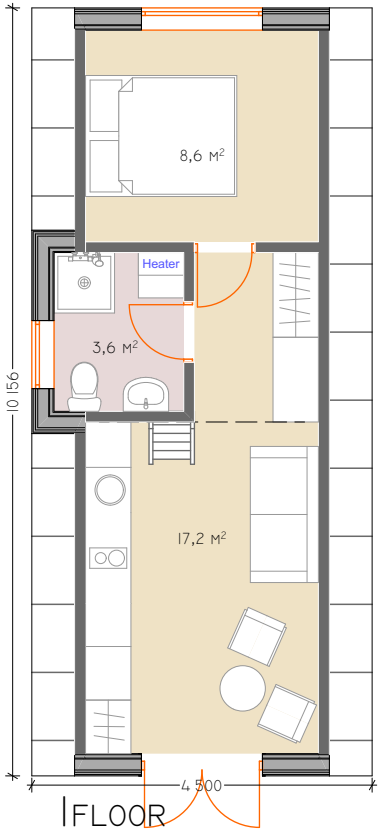

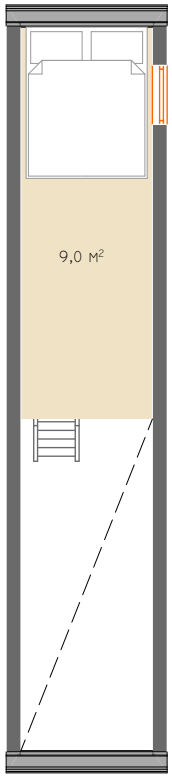

FLOOR AREA 38,4 M2
BUILDING AREA 45,7 M2
HEATING VOLUME 85 M3
HEATING (FIREPLACE) 5KW

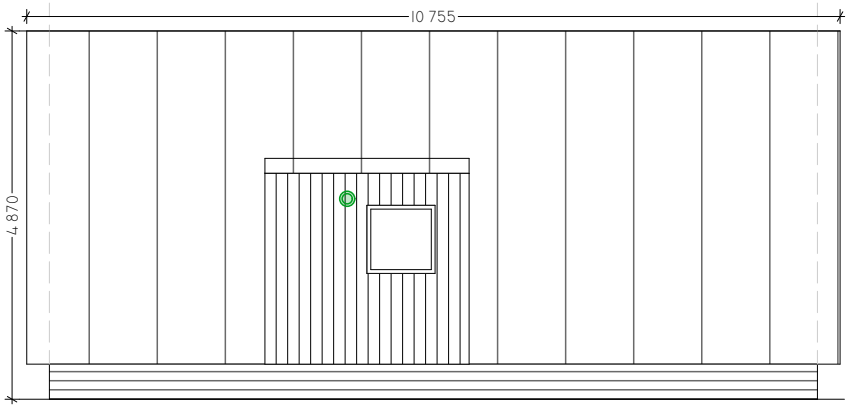

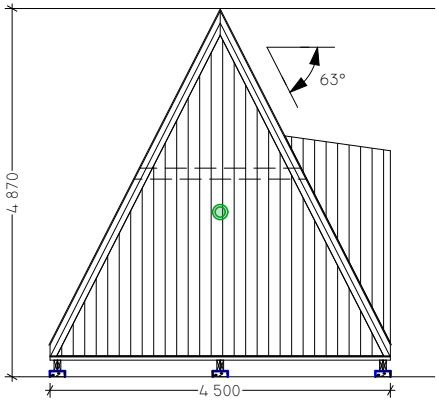

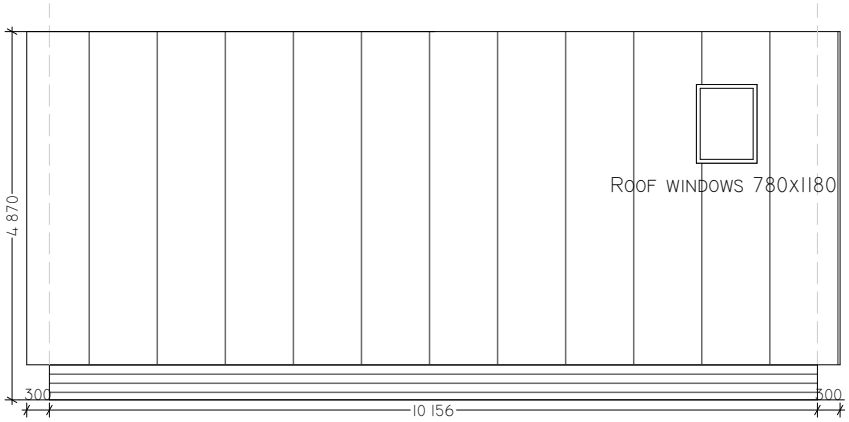

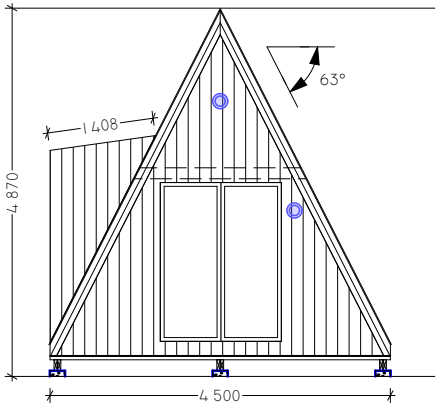

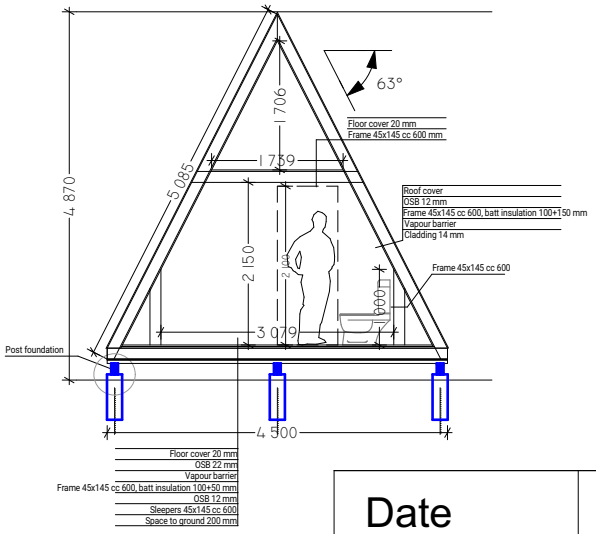

Date	Sheet	Drawing	Project ID
14.01.2022	1:100 A4	**Plans**	SOLO+100

avrame